CAD FILE:

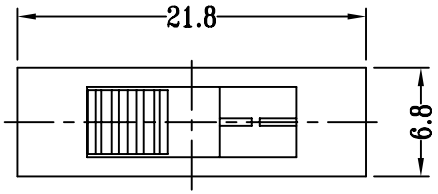

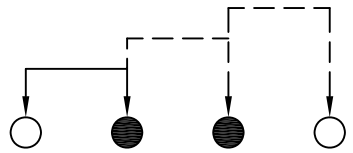

SCHEMATIC (NON-SHORTING)

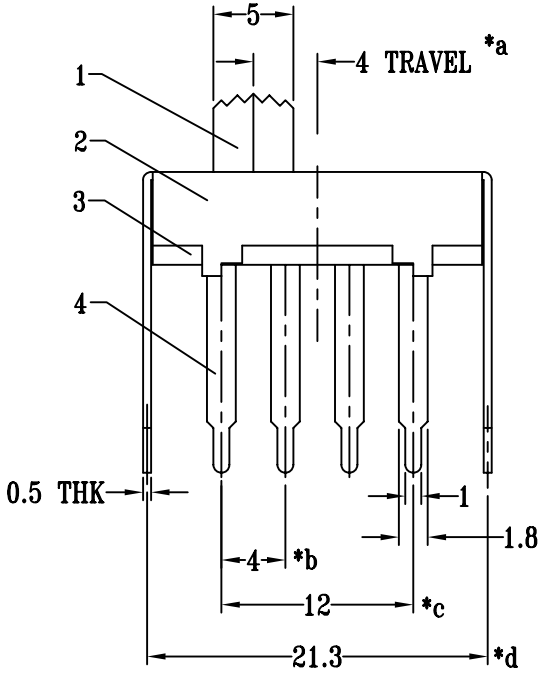

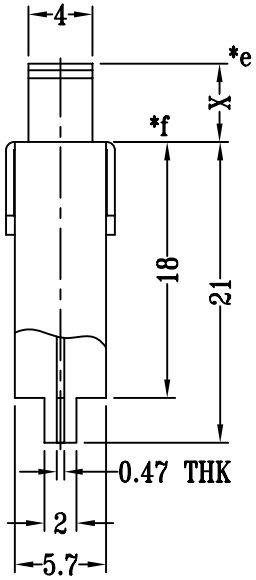

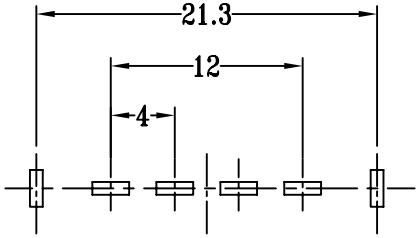

P.C.B LAYOUT

注:带"*"表示关键尺寸(6个)

NO.	PART NAME	MATERIAL	Q'TY	FINISHING
8				
7				
6	SPRING	STEEL WIRE	1	TEMPER
5	CONTACT CLIP	BRASS	1	Ag PLATED
4	TERMINAL	BRASS STRIP	4	Ag PLATED OVER Ni PLATED
3	BASE	PHENOLIC RESIN	1	BLACK
2	FRAME	STEEL STRIP	1	Ni PLATED
1	KNOB	POM	1	BLACK

TOLERANCE UNLESS SPECIFIED
WITHIN: 1.5±0.1mm
OVER : 1.5±0.2mm

SHENZHEN XIEJIA ELECTRONICS CO.,LTD.

ISSUE	DATE	DESCRIPTIONS	APPD.

TITLE : VERTICAL SLIDE SWITCH

UNIT : MM

DRWG NO.: XJ-DR-SS13H03-00

MODEL: SS-13H03

SCALE: 2:1

DWN.	ZHOUYU	2002-5-27
CHK'D	FANGYING	2002-5-27
APPD.	KANGXINAN	2002-5-27

ALL MATERIALS MUST BE COMPLIANT TO ROHS